# TVMI-PM

## TruVision Multi-imager and P/M Series IP PTZ Pendant Mount bracket, 57 mm / 2.24"

### Overview

The TruVision TVMI-PM Pendant Mount bracket allows multi-imager camera TVS-5101 to be installed on a ceiling. Addtitional extension elements are available to increase distance between camera and ceiling.

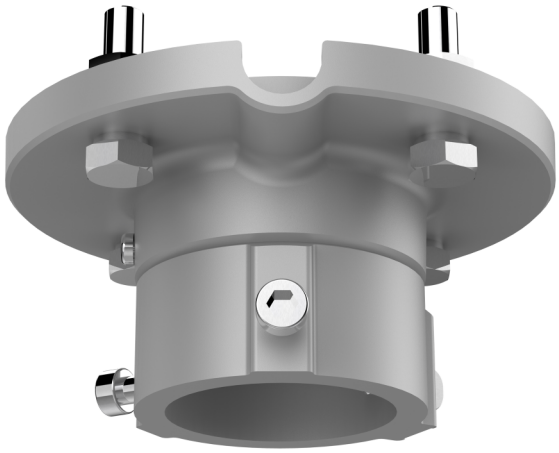

### Details

- Compatible with TVS-5101 TruVision multi-imager camera
- Aluminium alloy material with surface spray treatment

# TVMI-PM

## TruVision Multi-imager and P/M Series IP PTZ Pendant Mount bracket, 57 mm / 2.24"

## Technical specifications

### General

| | |
|---|---|
| Bracket type | Câmara |
| Support type | TruVision 360 graders kameraer |
| Bracket mounting part | Mounting bracket |
| Mount type | Vedhæng montering |
| Cable management | Yes |

### Physical

| | |
|---|---|
| Physical dimensions | 116.5 x 57 mm<br>4.59 x 2.24 in. |
| Net weight | 380 g<br>0.84 lb. |
| Colour | Cinzento (Pantone 428c) |
| Material | Aluminium |

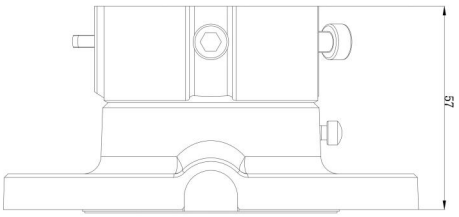


As a company of innovation, Kidde Global Solutions reserves the right to change product specifications without notice. For the latest product specifications, visit firesecurityproducts.com online or contact your sales representative.

Last updated on 28 August 2026 - 11:17