# 07127-00

## Adjustable mounting bracket

### General

The 07127-00 is an adjustable mounting bracket for use with FF700 series flame detectors. The mount allows the detector to be horizontally adjustable by up to 45°, and adjustable by up to 45° downwards.

The bracket is corrosion resistant an offers a high resistance to pitting and crevice corrosion in chloride environments.

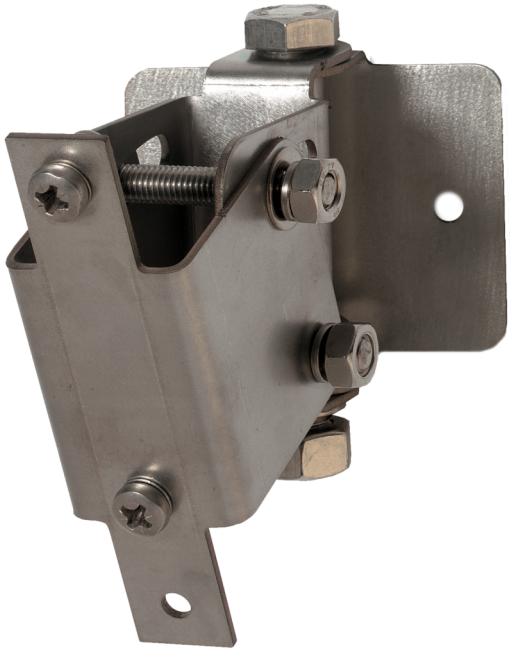

### Details

- Fully compatible with FF700 series flame detectors for easy installation
- Can be mounted on walls or unistruts

# 07127-00
## Adjustable mounting bracket

## Technical specifications

### General

| | |
|---|---|
| Compatibility | FF700 Series flame detectors |

### Physical

| | |
|---|---|
| Net weight | 700 g |
| Mounting type | Screw / bolt mount |
| Material (body) | Stainless steel |

### Environmental

| | |
|---|---|
| Vandal proof | Yes |
| Environment | Exd, Indoor, IS, Outdoor |

### Compatible products

| Category | Reference | Description |
|---|---|---|
| Detection device | FF742N | 16581 Dual IR Flame Detector In Die-Cast Zinc Alloy Housing |
| Detection device | FF746N | 16511 Dual IR Flame Detector In Eexd - IIC T6 Flame Proof Housing |
| Detection device | FF747N | 16571 Dual IR Intrinsic Safe Flame Detector In Die-Cast Zinc Alloy Housing |
| Detection device | FF751N | 16591 UV / Dual IR Flame Detector In Die Cast Zinc Alloy Housing |
| Detection device | FF756N | 16521 UV/IR² Flame Detector in Eexd - IIC T6 Flame Proof Housing |
| Detection device | FF762N | 16589 Triple IR Flame Detector In Die-Cast Zinc Alloy Housing |
| Detection device | FF766N | 16519 Triple IR Flame Detector In Eexd - IIC T6 Flame Proof Housing |
| Detection device | FF767N | 16579 Triple IR Intrinsic Safe Flame Detector In Die-Cast Zinc Alloy Housing |
| Mounting Accessories | 12545-00 | Weather Shield (Stainless Steel) |

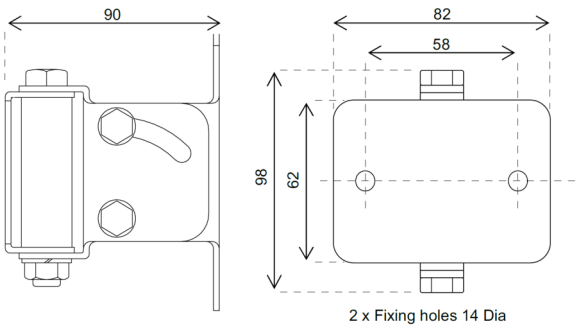


EDWARDS
Built for Resilience

As a company of innovation, Kidde Global Solutions reserves the right to change product specifications without notice. For the latest product specifications, visit firesecurityproducts.com online or contact your sales representative.

Last updated on 27 July 2026 - 10:51