S35-2MLC

SFP, Multimode för upp till 220/550 m, härdad -40 till 75 °C

Overview

The KGS Fire & Security transceiver module is specifically designed to accommodate high-performance optical fiber. Compliant with the SFP Multisource Agreement (MSA), these transceiver modules feature hot-plug capability for easy installation without interrupting host equipment operating online. The SFP Mini GBIC transceiver can install into KGS Fire & Security switch products with 100Base-FX or 1000Base-SX/LX SFP interface.



Detaljer

- SFP multi-source agreement compliant
- Data rate 1.25Gbps
- Max 220m distance based on 62.5 / 125 (OM1) fiber
- Max 550m distance based on 50 / 125 (OM2) fiber
- Class 1 laser safety standard IEC 60825 compliant
- LC duplex receptacle
- Low power dissipation
- Plug-and-play capability for easy installation
- Hot Pluggable
- -40ºC to +75ºC operation temperature
- TTL signal detect indicator
- Single power supply 3.3V
- Comply with the IEEE 802.3ab

S35-2MLC

SFP, Multimode för upp till 220/550 m, härdad -40 till 75 °C

Tekniska specifikationer

General

Category	SFP
Port type	Multi Tilstand
No. of fibers	2
Port speed	Gigabit
Wavelength	850 nm

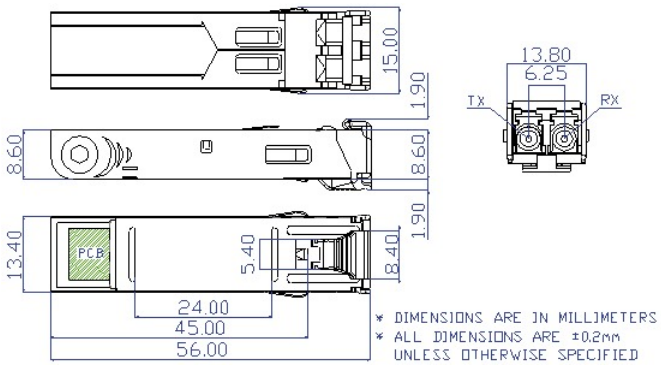

Kidde Global Solutions förbehåller sig rätten att ändra produktspecifikationer utan föregående meddelande. För de senaste produktspecifikationerna, besök se.firesecurityproducts.com online eller kontakta din försäljningsrepresentant.

Last updated on 12 November 2026 - 20:20