HB304

Surface mount panic switch, latching red LED indicator and screw terminals, SPDT, white

The HB304 Panic Switch activates the alarm output when the user pulls the actuating lever. An external LED lights and latches, indicating that the alarm circuit has been activated. The lever is closed first to rearm the alarm switch, then the latching LED circuit is reset externally at the control panel.



Applications

Mounted out of sight but within easy reach for manual activation, such as under desks or counters in banks, jewelry stores and other facilities where people or property are at risk.

Details

- Mounts underneath or on side of desk or counter
- Smooth housing prevents accidental damage to clothing
- Actuating lever designed to accommodate only tip of finger
- Reed contact resets when lever is in closed position
- Version with latching LED available

HB304

Surface mount panic switch, latching red LED indicator and screw terminals, SPDT, white

Technical specifications

General

Type	Omskifter
Water resistant	No
LED	Yes
Latching LED circuit	Yes
Alarm contact	SPDT
Connections	Screw terminals
LED colour	Red

Wired/wireless

Wired-wireless	Kablede

Electrical

Power supply value	7 to 15 VDC
Current consumption	8 mA max.

Physical

Physical dimensions	74 x 45 x 19 mm
Colour	Hvid

Environmental

Operating temperature	-18 to +43°C

Output

Relay	SPDT

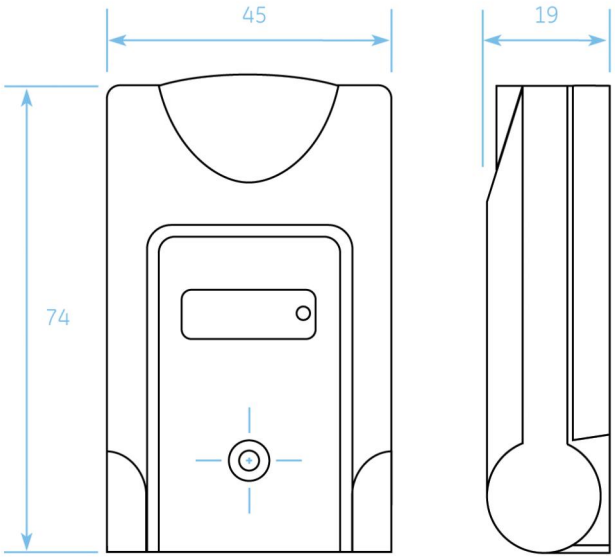

As a company of innovation, Kidde Global Solutions reserves the right to change product specifications without notice. For the latest product specifications, visit firesecurityproducts.com online or contact your sales representative.

Last updated on 18 June 2026 - 14:23