# S30-1SLC/B-20

## SFP-Port 1000Base-BX20 Mini-GBIC Module - 1 Fiber - 20Km - Single-Mode - Tx 1490nm - Rx 1310nm (0~50°C)

### Overview

The KGS Fire & Security transceiver module is specifically designed to accommodate high-performance optical fiber, including integrated duplex data link over single mode. Compliant with the SFP Multisource Agreement (MSA), these transceiver modules feature hot-plug capability for easy installation without interrupting host equipment operating online. The SFP transceiver can install into KGS Fire & Security switch products with 100Base-FX or 1000Base-SX/LX SFP interface.




### Dettagli

- SFP multi-source agreement compliant
- Data rate 1.25Gbps
- Class 1 laser safety standard IEC 60825 compliant
- 1(single) Fiber to be deployed together with S30-1SLC/A-20
- LC connector
- Low power dissipation
- Plug-and-play capability for easy installation
- Hot Pluggable
- 0ºC to +50ºC operation temperature
- TTL signal detect indicator
- Single power supply 3.3V
- Comply with the IEEE 802.3ab

# S30-1SLC/B-20

## SFP-Port 1000Base-BX20 Mini-GBIC Module - 1 Fiber - 20Km - Single-Mode - Tx 1490nm - Rx 1310nm (0~50°C)

## Specifiche tecniche

### General

| | |
|---|---|
| Category | SFP |
| Port type | Single Mode |
| No. of fibers | 1 |
| Port speed | Gigabit |
| Wavelength | 1310 nm, 1490 nm |

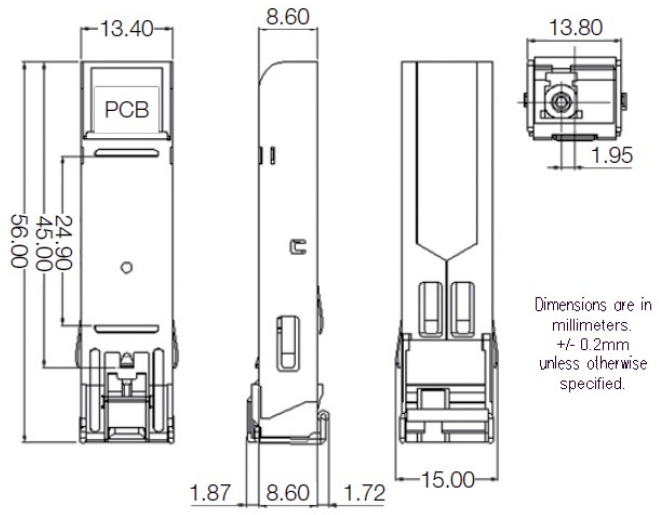


In quanto azienda in continua innovazione, Kidde Global Solutions si riserva il diritto di modificare le specifiche del prodotto senza preavviso. Per avere informazioni sempre aggiornate, visita it.firesecurityproducts.com online o contatta il tuo riferimento commerciale.

Last updated on 12 November 2026 - 20:20