FF703N

Gamme FF* Torche de test universelle

General

The FF703N is a test and calibration unit explicitly designed to work with the full range of FF* Flame Detectors.
Using the intuitive menu, choose the type of Flame Detector to be tested; squeeze the trigger, and the FF703N will automatically perform a test from a distance of up to 8 metres, which means that in many applications, the Flame Detector can be tested from ground level.
The FF703N recreates the characteristic spectrum of a flame using a combination of UV and IR bulbs. Once testing is complete the FF703N can store your test results for download to a PC.

The FF703N 's integral battery is recharged via USB from either a PC or off the shelf USB charger.

Flame detector characteristics

Most optical flame sensors respond to Ultra Violet (UV) and or Infra Red (IR) radiation emitted from flames during combustion. Many sensors also use flame flicker techniques to distinguish between flames and other optical false sources.

The test unit simulates the flickering flame signal by modulating the output of a filament lamp. The thermal time constant of a filament lamp prevents the generation of a perfect flame flicker signal. The slow response of the filament lamp will mean that some flame sensors many require more time to activate under test than they would with a real flame.

Operation

The unit is intended for service engineers to use when performing commissioning and routine maintenance. As the test unit does not have an (Ex) approval for hazardous areas, a permit would be required to check a detector in such areas. The service engineer could also carry a portable flammable gas alarm to indicate if the area is safe for testing.



Détails

- Jusqu'à 40 tests de 30 secondes chacun
- Batteries rechargeables USB-C au lithium-ion

FF703N

Gamme FF* Torche de test universelle

Spécifications techniques

Detection

Field of view	8 m

Physical

Physical dimensions	112 x 245 x 197 (W x H x D)
Net weight	0.850 kg
Colour	Black
Mounting type	Portable

Environmental

Operating temperature	-10 to +55°C
Storage temperature	-20 to 65°C
Environment	Indoor, Outdoor
IP rating	IP54

Produits compatibles

Catégorie	Référence	Description
Detection device	FF742N	16581 Dualer IR-Flammenmelder im Gehäuse aus Zinkdruckgusslegierung
Detection device	FF746N	16511 Dualer IR-Flammenmelder im flammensicheren Gehäuse Eexd - IIC T6
Detection device	FF747N	16571 Dual IR Intrinsic Safe Flame Detector In Die-Cast Zinc Alloy Housing
Detection device	FF751N	16591 UV-/Dual-IR-Flammenmelder im Gehäuse aus Zinkdruckgusslegierung
Detection device	FF756N	16521 UV/IR² Flame Detector in Eexd - IIC T6 Flame Proof Housing
Detection device	FF762N	16589 Dreifach-IR-Flammenmelder im Gehäuse aus Zinkdruckgusslegierung
Detection device	FF766N	16519 Dreifach-IR-Flammenmelder im flammensicheren Gehäuse Eexd - IIC T6
Detection device	FF767N	16579 Triple IR Intrinsic Safe Flame Detector In Die-Cast Zinc Alloy Housing

Dimensions

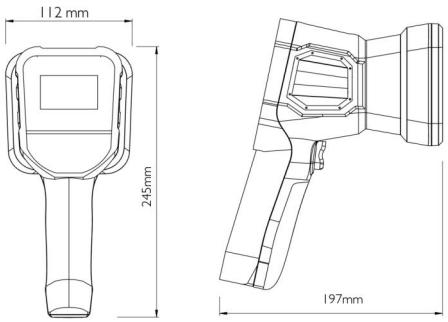

EDWARDS
Built for Resilience

En tant que société d'innovation, Kidde Global Solutions se réserve le droit de modifier les spécifications des produits sans préavis. Pour les dernières spécifications du produit, visitez le site web fr.firesecurityproducts.com ou contactez votre représentant commercial.

Last updated on 12 November 2026 - 18:57