# TVP-WM-PM

## TruVision PTZ dome pole mount adapter

### Overview

The TVP-WM-PM is a pole mount accessory to be used in combination with the TVP-WMB or GEA-102. This pole mount accessory allows for a PTZ camera to be mounted onto a pole and can provide the user with a greater field of view when observing large areas.

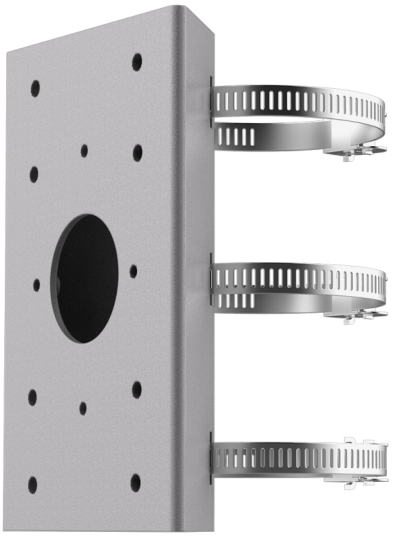

### Details

- Pole mount adapter for TruVision PTZ brackets
- Compatible with TVP-WMB or GEA-102

# TVP-WM-PM

## TruVision PTZ dome pole mount adapter

## Technical specifications

### General

| | |
|---|---|
| Bracket type | Camera |
| Support type | PTZ  camera, TruVision bracket |
| Bracket mounting part | Mounting adapter |
| Mount type | Pole mount |
| Cable management | No |

### Physical

| | |
|---|---|
| Physical dimensions | 194 × 126 × 46 mm<br>7.64 × 5.06 × 1.81 in. |
| Net weight | 1178 g<br>2.6 lb. |

### Compatible products

| Category | Reference | Description |
|---|---|---|
| Brackets & Mounts | TVP-WMB | TruVision PTZ dome wall mount bracket |

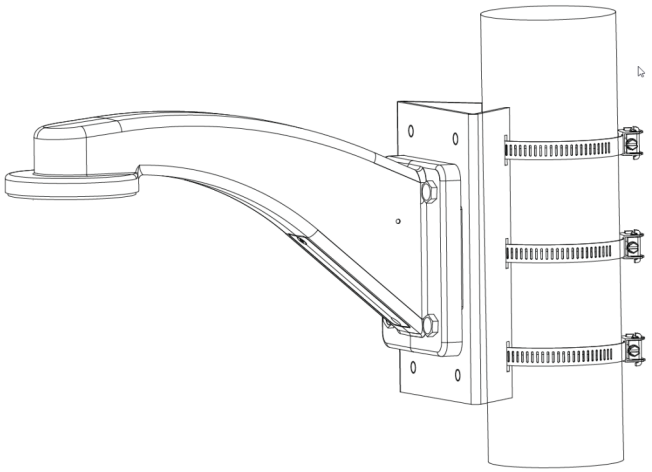

As a company of innovation, Kidde Global Solutions reserves the right to change product specifications without notice. For the latest product specifications, visit firesecurityproducts.com online or contact your sales representative.

Last updated on 27 August 2026 - 20:16