KE-DBA-ADPW-ZIT

Intelligent addressable base accessory - Ziton adapter (White)

General

The KE-DBA-ADPW-KIL is an Excellence series base adapter. It allows easy migration form a legacy Kilsen KL7A series installation by offering the possibility to keep the legacy standard base installation intact, but convert to the new Excellence series intelligent detectors.

Standard Base

The adapter base is designed to enable the new Excellence series detectors to be plugged in without any need for force - particularly useful when fitting to suspended ceilings. To make it even easier, the base has a "one way only" fit.

The adapter base contains no electronic parts that could be damaged during installation. It automatically locks into the legacy standard base just like fitting a detector The adapter also supports the option to lock the Excellence series detector in place to avoid unauthorised detector removal.

As with all Excellence series standard bases, the Excellence series base adapter supports Excellence series address tags for neat product identification labeling.

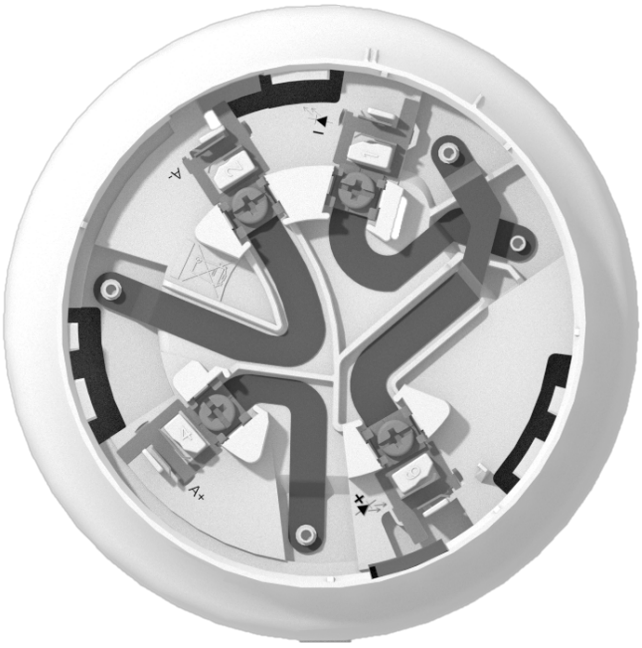

Details

- Allows the reuse of legacy Ziton ZP7 standard bases without installation modification in systems upgrading to the new intelligent Excellence series detectors
- Automatic locking to legacy base avoids adapter removal when the new detector is removed
- Supports the Excellence detector base locking option to prevent unauthorised removal of the Excellence series detector
- Standard Excellence series base already integrated
- Hides the legacy base for perfect colour matching to the new Excellence series detector
- Supports Excellence series address tags for neat labelling and device identification
- EN54 approved with the Excellence series detectors

KE-DBA-ADPW-ZIT

Intelligent addressable base accessory - Ziton adapter (White)

Technical specifications

General

Compatibility	Ziton ZP7-SB1 standard detector bases
Connectivity	No wiring changes required

Physical

Physical dimensions	120.5 x 32.5 mm (Ø x h)
Net weight	80 g
Colour	Traffic white (RAL9016)
Mounting type	Base mount
Material (body)	PC / ABS

Environmental

Vandal proof	No
Operating temperature	−10 to +65°C
Storage temperature	−30 to +75°C
Relative humidity	10 to 93% (noncondensing)
Environment	Indoor

Regulatory

Compliancy	CE, REACH, RoHS 3, UKCA, WEEE
Certification	CE

Compatible products

Category	Reference	Description
Detection device	KE-DBA-TAGW	Intelligent addressable base accessory - address tag (white), supplied in packs of 10
Detection device	KE-DP3020W	Excellence series intelligent addressable dual optical smoke detector
Detection device	KE-DP3021W	Excellence series intelligent addressable dual optical/heat detector
Detection device	KE-DT3001W-HAB	Excellence series intelligent addressable heat detector

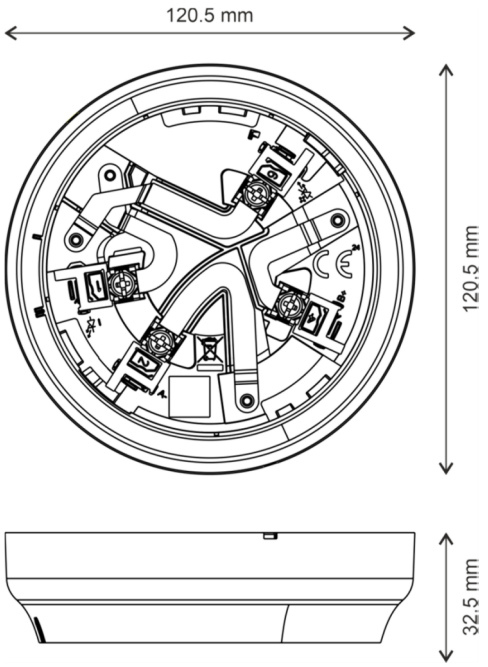

KIDDE GLOBAL SOLUTIONS

As a company of innovation, Kidde Global Solutions reserves the right to change product specifications without notice. For the latest product specifications, visit firesecurityproducts.com online or contact your sales representative.

Last updated on 2 June 2026 - 16:04