116-BG-21

Dualer IR-Flammenmelder

General

BG-21 is a point flame detector for detection of fires involving combustion of carbonaceous materials.
The detector has a high IP rating making it suitable for the harshest environments.
The detector can be used with most conventional fire alarm panels giving alarm on the current increase principle. An alarm resistor must be fitted between terminal 3 and 4. The value of the alarm resistor can be dimensioned for correct alarm current depending on the panel.
Performance class can be configured by the system according to table 1.
The advanced signal processing and DYFI+ intelligence ensure that the detector has a high immunity to any nuisance alarm source combined with fast detection of real fires.

Installer and maintenance friendly

Two infrared sensors detect the infrared spectrum from a fire. The sensors evaluate different parts of the infra red spectrum using this information to verify that the signals correspond to the characteristics of a real flame.



Einzelheiten

- Dualer IR-Detektor
- Konventionell
- IP66-Gehäuse
- Geringer Stromverbrauch
- Immunität gegen falsche Quellen
- Entspricht der Norm EN54: Teil 10

116-BG-21
Dualer IR-Flammenmelder

Technische Spezifikationen

Electrical

Power supply type	Zone powered
Power consumption	90 µA ; bis zu 2,1 mA Alarmmodus
Operating voltage	10 bis 26 VDC

Physical

Physical dimensions	119 x 63.5 mm (Ø x H)
Net weight	210 g
Colour	Light grey, Transparent
Mounting type	Base mount, Ceiling mount, Wall mount

Environmental

Vandal proof	No
Operating temperature	-40 bis +70°C
Storage temperature	-40 bis +70°C
Relative humidity	96% max. nicht kondensierend
Environment	Indoor, Outdoor
IP rating	IP66

Regulatory

Compliancy	CE, REACH, RoHS 3, WEEE
Certification	CPR
Standards	A1:2005

Dimensions

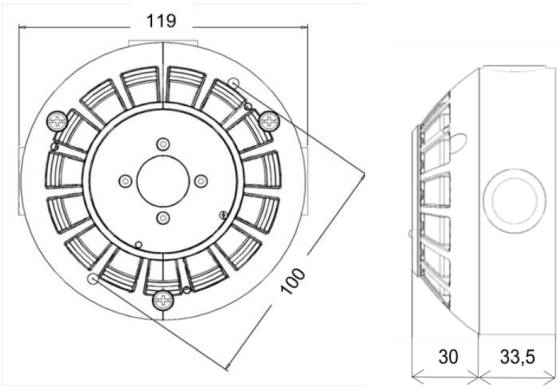

Field of view

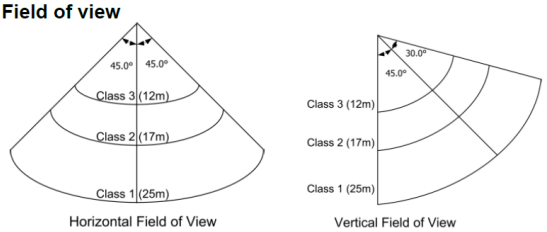

EDWARDS
Built for Resilience

Als innovatives Unternehmen behält sich Kidde Global Solutions das Recht vor, Produktspezifikationen ohne Ankündigungen zu ändern. Für die aktuellsten Produktspezifikationen, besuchen Sie bitte de.firesecurityproducts.com online oder kontaktieren Sie bitte unsere Vertriebsmitarbeiter.